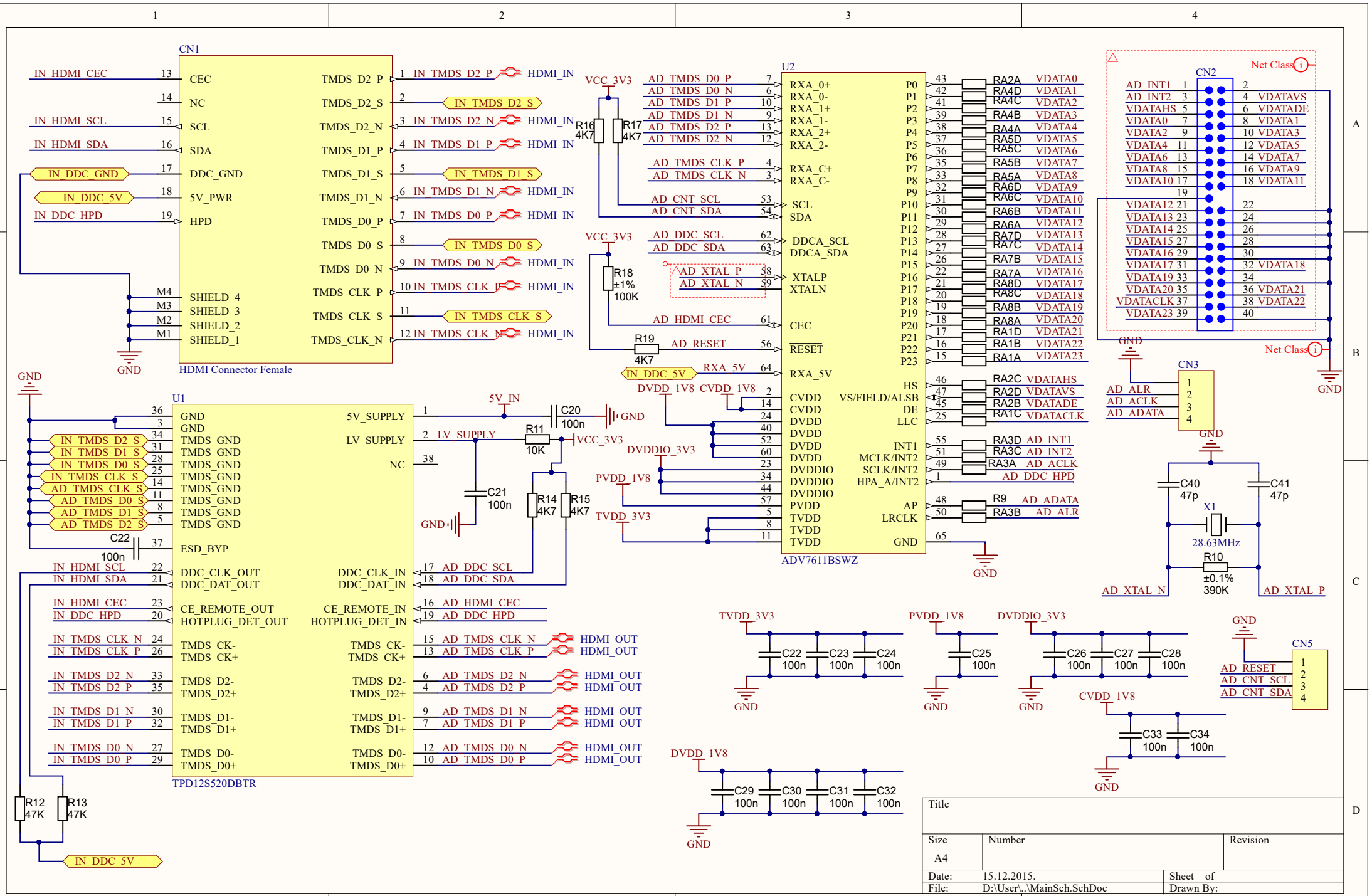
CN1
HDMI Connector Female
U2
ADV7611BSWZ
U1
TPD12S520DBTR
CN2
CN3
CN5
Net Class
X1
28.63MHz
Title
Size
A4
Number
Revision
Date: 15.12.2015.
Sheet of
File: D:\User\..\MainSch.SchDoc
Drawn By: